Hitachi Power Tools

LIST NO. J848

ELECTRIC TOOL PARTS LIST

■ BACK PACK POWER SUPPLY

2013·2·21

Model BL 36200

(E1)

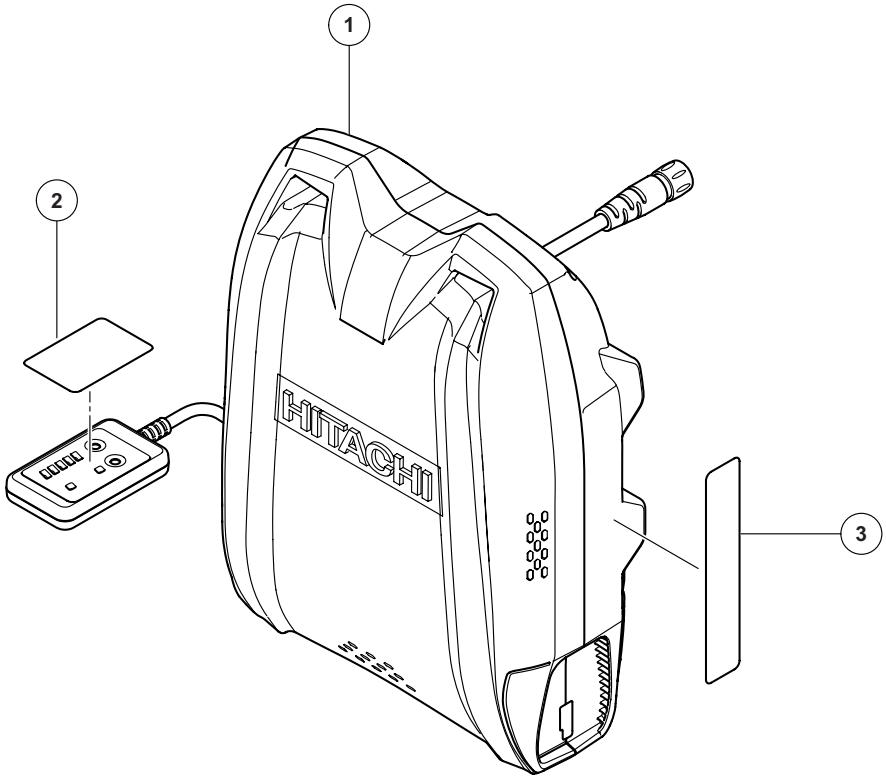

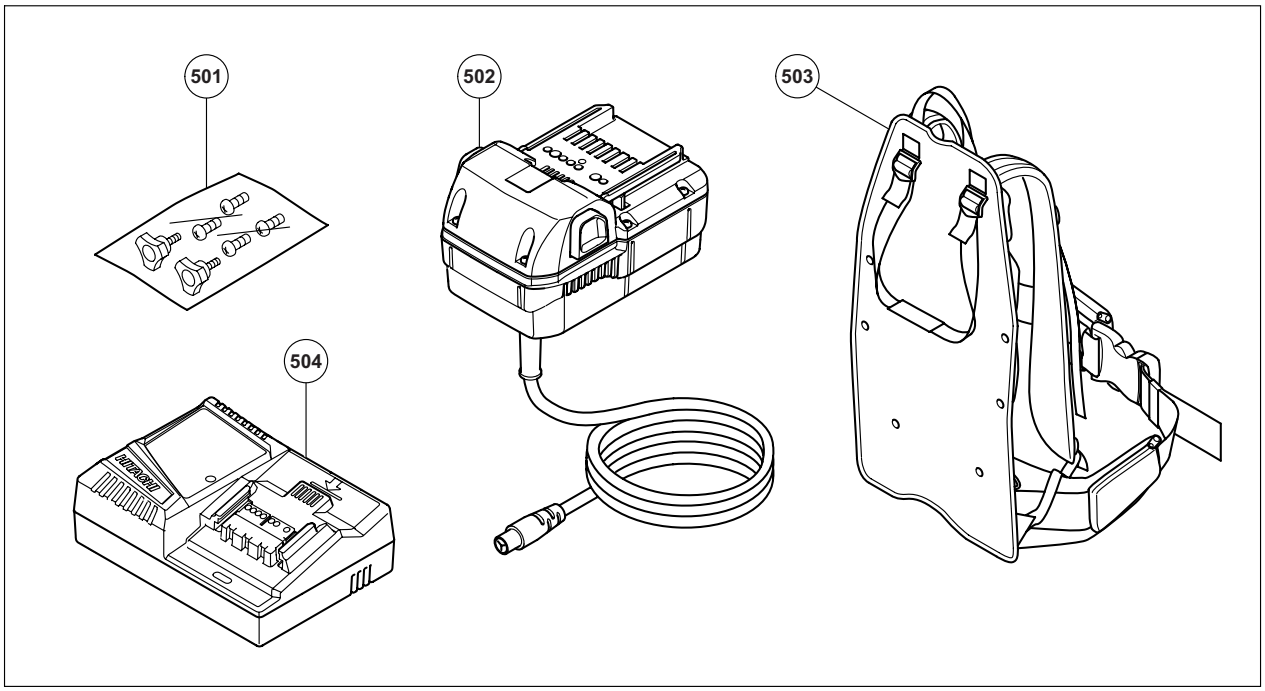

PARTS

	ITEM NO.	CODE NO.	DESCRIPTION	NO. USED	REMARKS	
*	1	335-719	LARGE-CAPACITY BATTERY (FOR BL 36200) EUR	1		
*	1	335-718	LARGE-CAPACITY BATTERY (FOR BL 36200) USA	1	FOR USA, CAN	
	2		CAUTION LABEL	1		
	3		NAME PLATE	1		

STANDARD ACCESSORIES

ITEM NO.	CODE NO.	DESCRIPTION	NO. USED	REMARKS	
501	335-716	SCREW SET M5	1		
502	335-715	BATTERY ADAPTER	1		
503	335-123	CARRY BAND	1		
504		CHARGER (MODEL UC 36YRSL)	1		

*ALTERNATIVE PARTS

Printed in Japan 2 - 13
(130221N)